MD9400 / MD9410 - INDICATOR / ALARM

STANDARD

0.8" LARGE 3.5 DIGIT DISPLAY
INPUT TC,RTD,4-20mA, 0-10VDC
3.5 DIGIT DISPLAY
PROGRAMMABLE SCALING
POWER - 90 - 260VAC

OPTIONS

1, 3 ALARM OUTPUT
4-20mA RETRANSMISSION
24VDC SENSOR EXCITATION
POWER - 24V AC/DC

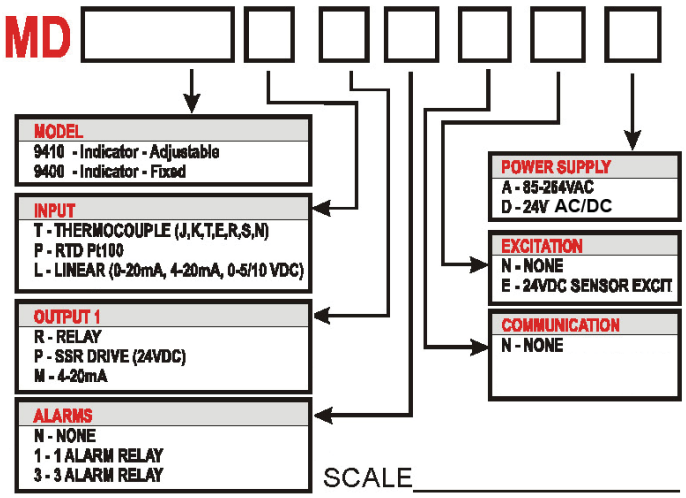

SPECIFICATIONS - MD SERIES

INPUT

Thermocouple	J, K, T, E, B, R, S, N
RTD	Pt100 ohms RTD (DIN)
Range	Config -1999 to +9999
Accuracy	0.25% +/-1 DIGIT
Sample Rate	200mS

ENVIRONMENT

Temp&Humid.	0-55degC, 0-95%RH
Insulation	20M ohms min @ 500VDC

PHYSICAL

Size	96x48x100mm (1/8DIN)
Panel cutout	92mmx45mm
Display	4 DIGIT, 13mm LED
Weight	250-375g

POWER

Standard	85-265VAC 50/60Hz 6VA
Option	24V AC/DC

OUTPUT

Alarms (3 max)	3A/240VAC resistive.
PV Retrans	Isolated 0/4-20mADC

CABLE & CONNECTORS - TRANSDUCER / TRANSMITTERS

ORDER CODE

MP - CAB - Connector - Material - Protection - Length

Connector	Material	Protection	Length
6B - 6pin Bayonet	**P** - 105°C PVC	**N** - None	**12** - 12ft (3.7m)
6S - 6pin Screw	**T** - 200°C Teflon	**B** - 304SS Braid	**25** - 25ft (7.7m)
8S - 8pin Screw		**H** - 304SS Armour	**50** - 50ft (15m)

STOCK LIST

LENGTH	DESCRIPTION
MP-CAB-6B-PN12	6pin Bayonet 12ft PVC
MP-CAB-6B-PN25	6pin Bayonet 25ft PVC
MP-CAB-6B-PN50	6pin Bayonet 50ft PVC
MP-CAB-6B-TN12	6pin Bayonet 12ft Teflon
MP-CAB-6B-TN25	6pin Bayonet 25ft Teflon
MP-CAB-6B-TN50	6pin Bayonet 50ft Teflon

LENGTH	DESCRIPTION
MP-CAB-6B-TH12	6pin Bayonet 12ft Teflon/Braid
MP-CAB-6B-TH25	6pin Bayonet 25ft Teflon/Braid
MP-CAB-6B-TH50	6pin Bayonet 50ft Teflon/Braid
MP-CAB-6B-TB12	6pin Bayonet 12ft Teflon/Armour
MP-CAB-6B-TB25	6pin Bayonet 25ft Teflon/Armour
MP-CAB-6B-TB50	6pin Bayonet 50ft Teflon/Armour

CABLE ASSEMBLIES - THERMOCOUPLE / RTD

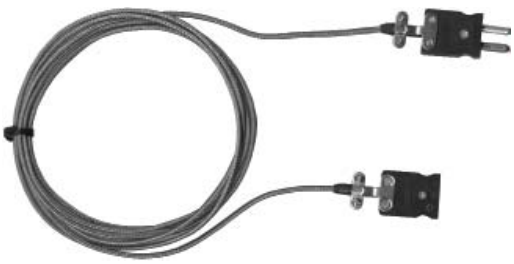

ORDER CODE

A900 - Type - Length - Wire - Term 1 - Term 2

Type	Length	Wire	Term 1	Term 2
J - Thermocouple J	**144** - 12ft (3.7m)	**P** - 105°C PVC	**1** - Fork Terminal	**1** - Fork Terminal
K - Thermocouple K	**300** - 25ft (7.7m)	**T** - 200°C Teflon	**2** - Male Plug	**2** - Male Plug
RTD - PT100 Sensor	**600** - 50ft (15m)	**B** - 450°C Fiberglass + S/S Braid	**3** - Female Jack	**3** - Female Jack

STOCK LIST

LENGTH	DESCRIPTION
A900J-144-P-3-1	J-t/c 12ft PVC female+fork
A900J-300-P-3-1	J-t/c 25ft PVC female+fork

LENGTH	DESCRIPTION
A900J-144-B-3-1	J-t/c 12ft S/S Braid female+fork
A900J-300-B-3-1	J-t/c 12ft S/S Braid female+fork